| CUSTOMER TERMINAL | ROHS | Lead(Pb)-free |
|---|---|---|
| | YES | YES |

FERRIWO

## 1.Mechanical Dimensions

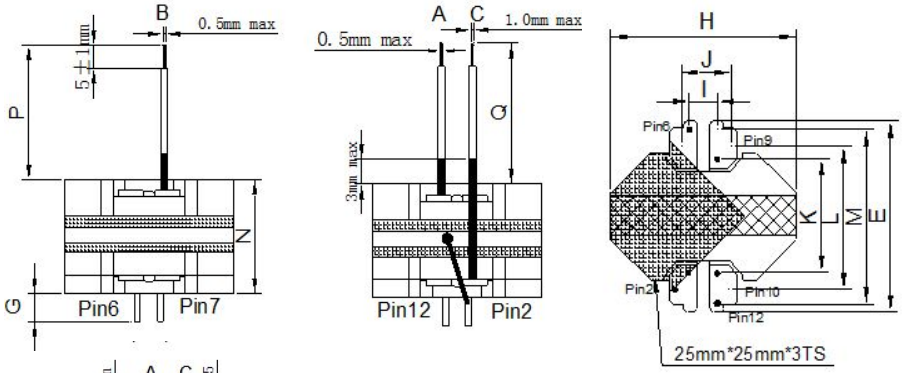


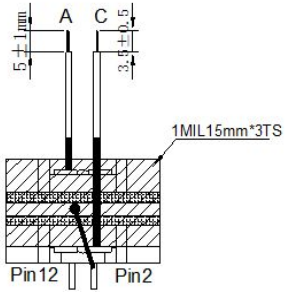


| | | |
|---|---|---|
| G | 3.5 | ±0.5 |
| E | 28.5 | MAX |
| H | 29.0 | MAX |
| N | 20.0 | MAX |
| I | 3.6 | ±0.3 |
| J | 7.2 | ±0.3 |
| K | 18.0 | ±0.4 |
| L | 21.6 | ±0.4 |
| M | 25.2 | ±0.4 |
| P | 35.0 | ±2.0 |
| Q | 45.0 | ±2.0 |

## 2.Schematic Diagram

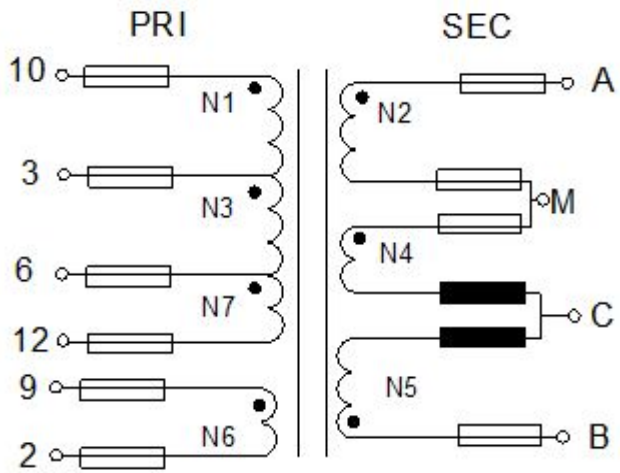


## 3.Material List

Core:FW44 RM10

Bobbin:FWB1005(6+6PIN)

Wire:2UEW TIW

Copper foil: 0.025t*6.0/8.0mm

Operating Temperature: -30 to115 ℃

## 4.Electrical Specification

Inductance： L(10-12):850±5%uH 70KHZ , 1.0V

Leakage inductance: 15uH MAX 70KHZ , 1.0V

DCR： (12-10)=0.27Ω MAX

Hi-Pot:P-S: AC 60Hz 4000V 1mA 3S

S-CORE:AC 60Hz 4000V 1mA 3S

| REV. | DATE | | DRW. | | Drawing Title: | Part No: |
|---|---|---|---|---|---|---|
| 0 | 00/00 | Convention Placement | | | TRANSFORMER | FWPTRM10V851J |
| | | | CHK. | | | |
| ROHS | | www.ferriwo.com | APP. | | Customer P/N | Specification Sheet 1of 1 |

THIS DOCUMENT IS STRICTLY NOT ALLOWED TO BE DUPLICATED WITHOUT AUTHORIZATION